WATER SERIES

C-300 TO C-319

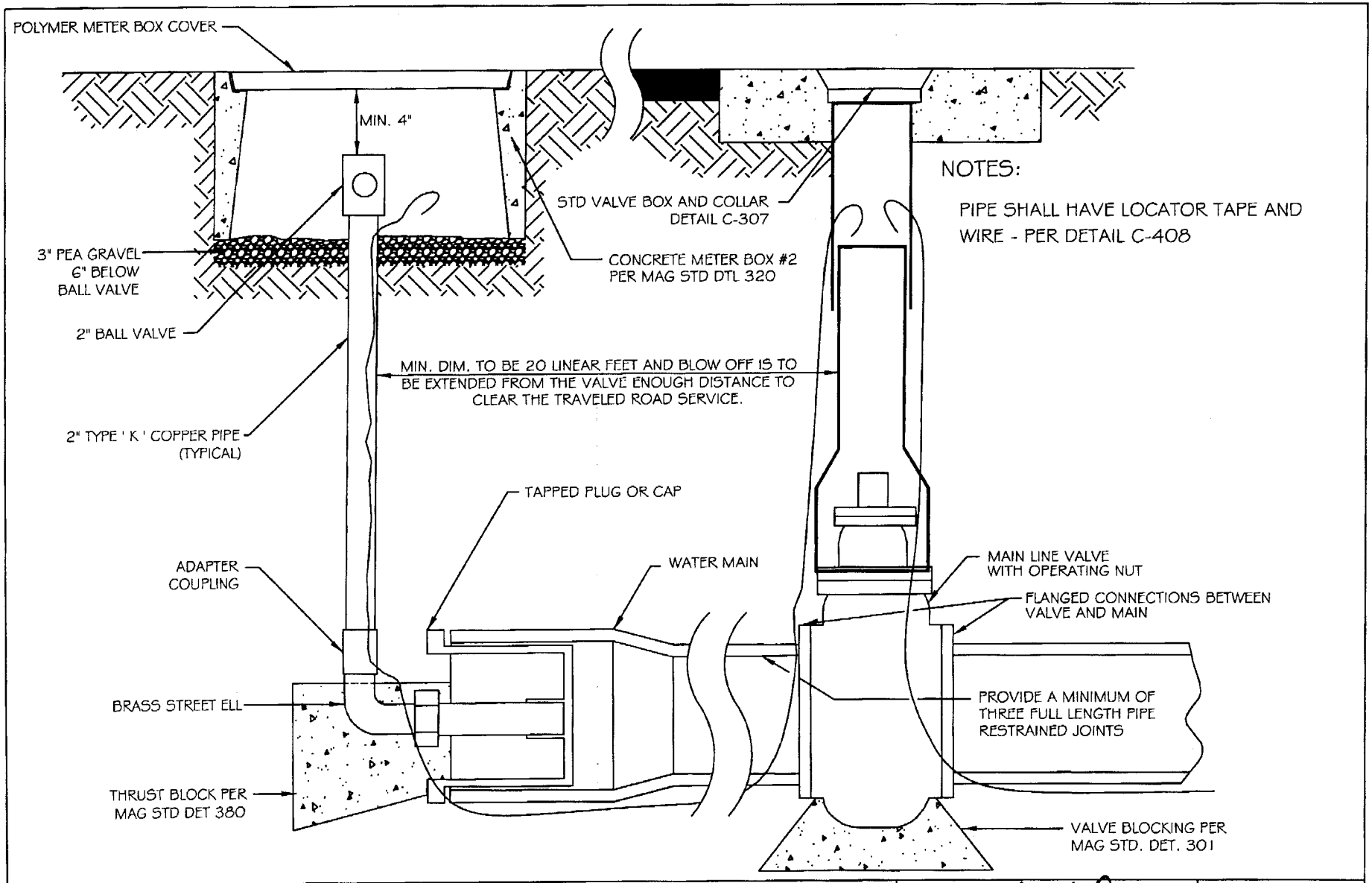

NOTES:

PIPE SHALL HAVE LOCATOR TAPE AND WIRE - PER DETAIL C-408

DETAIL NO.					DETAIL NO.
C-300	CITY OF CHANDLER STANDARD DETAIL	**FLUSHING PIPE ASSEMBLY WITH BALL VALVE**	APPROVED: CITY ENGINEER		**C-300**
NTS			DATE: 01/08/09		NTS

CAUTION: BEFORE SERVICES ARE INSTALLED, DRIVEWAY LOCATIONS SHOULD BE VERIFIED AND THE SERVICES CONSTRUCTED TO AVOID CONFLICTS.

NOTES:

1. TYPE 'K' RIGID COPPER SERVICE (1-1/2" & LARGER) SHALL HAVE SWEAT JOINTS. 1" SERVICES SHALL BE TYPE K SOFT COPPER WITH FLARED FITTINGS. COMPRESSION FITTINGS ARE NOT ALLOWED.
2. CONTRACTOR SHALL BACKFILL AND COMPACT THE TRENCHES PER MAG STANDARD SPECIFICATION TABLE 601-2.
3. CITY OF CHANDLER TO SET WATER METERS WHEN ORDERED BY OWNER/DEVELOPER. THE CITY DOES NOT PROVIDE ANY PARTS NEEDED PRIOR TO, OR AFTER, METER INSTALLATION. CONTRACTOR SHALL PROVIDE BRASS BOLTS FOR LARGER THAN 1" METERS.
4. ANGLE BALL METER VALVE SHALL BE FORD BA23-342W, BA23-444W, BFARW13, BFA13, OR APPROVED EQUAL. SET 11" BELOW TOP OF THE COVER.
5. METER BOX SHALL BE SET WITHIN CITY RIGHT OF WAY, OR DEDICATED WATERLINE EASEMENT. TOP OF BOX SHALL BE FLUSH WITH TOP OF SIDEWALK, OR IN CASES OF SLOPING YARDS, FLUSH WITH DRIVE PERPENDICULAR TO STREET.
6. LONG DIMENSION OF METER AND BOX SHALL BE PERPENDICULAR TO STREET.
7. NO METER SHALL BE SET IN ANY CONCRETE OR PERMANENT STRUCTURE.
8. METER BOX PER MAG STD. DET. 320, CONCRETE OR POLYMER EQUAL.
9. METERS BOXES IN PARALLEL INSTALLATION SHALL HAVE A MINIMUM 4" CLEAR ON THE SIDES. WHERE BACKFLOW ASSEMBLIES ARE SPECIFIED, EACH METER SHALL HAVE ITS OWN BACKFLOW ASSEMBLY.
10. BOX COVER (LID) SHALL BE POLYMER CONCRETE OR MODIFIED POLYETHYLENE WITH METER READER ANTENNA HOLE. BOX COVERS FOR RECLAIMED WATER SERVICES SHALL BE PAINTED PANTONE 512 PURPLE. COVER SHALL IDENTIFY "CITY OF CHANDLER" AND SPECIFY "WATER" OR "RECLAIMED WATER". COVERS MUST PROPERLY FIT IN THE #2 AND #4 CONCRETE BOXES IN ACCORDANCE WITH MAG CONCRETE METER BOX SPECIFICATIONS.

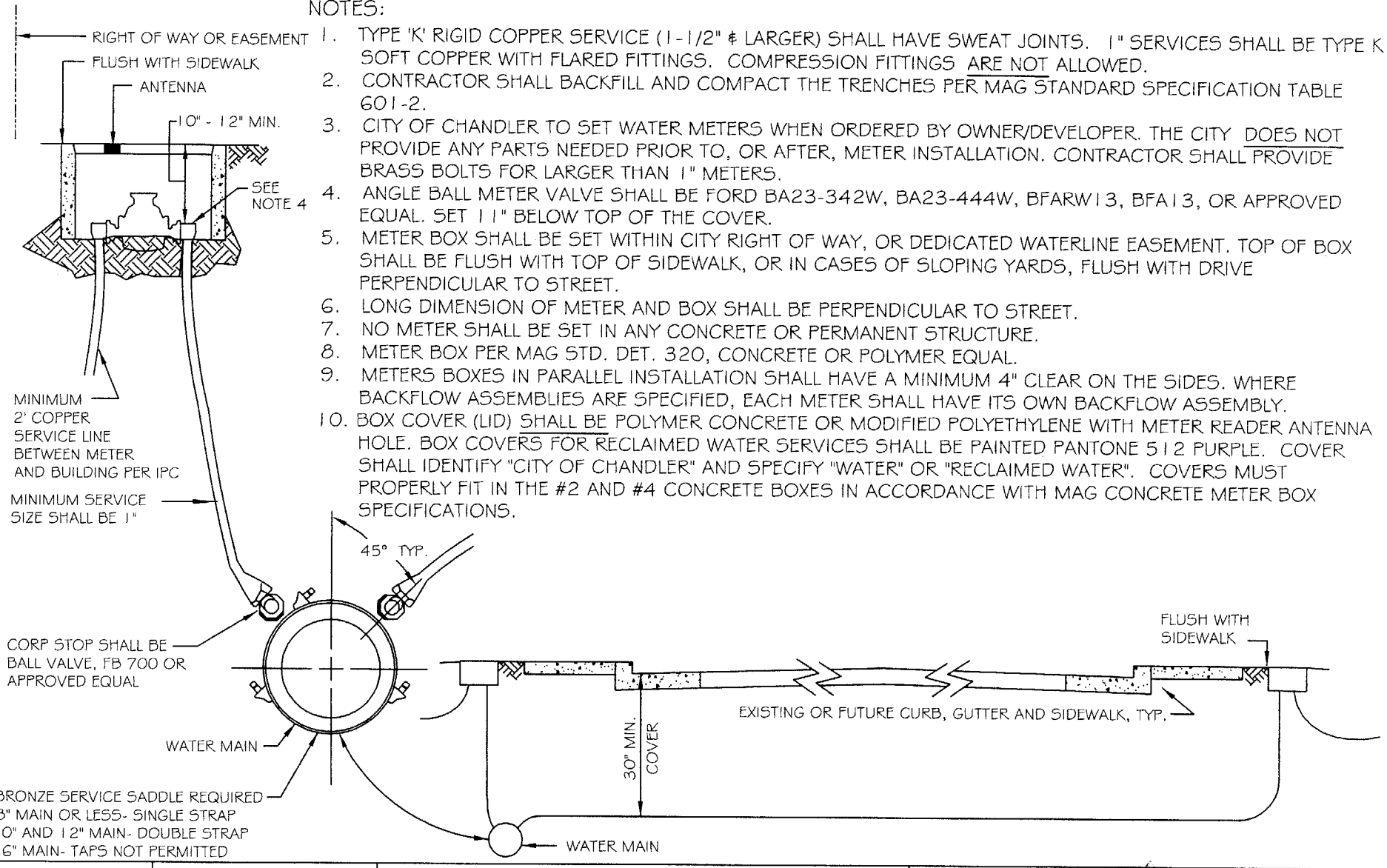

DETAIL NO.					DETAIL NO.
C-301 NTS	CITY OF CHANDLER STANDARD DETAIL	**WATER SERVICE INSTALLATION**	APPROVED: CITY ENGINEER DATE: 01/14/10		**C-301** NTS

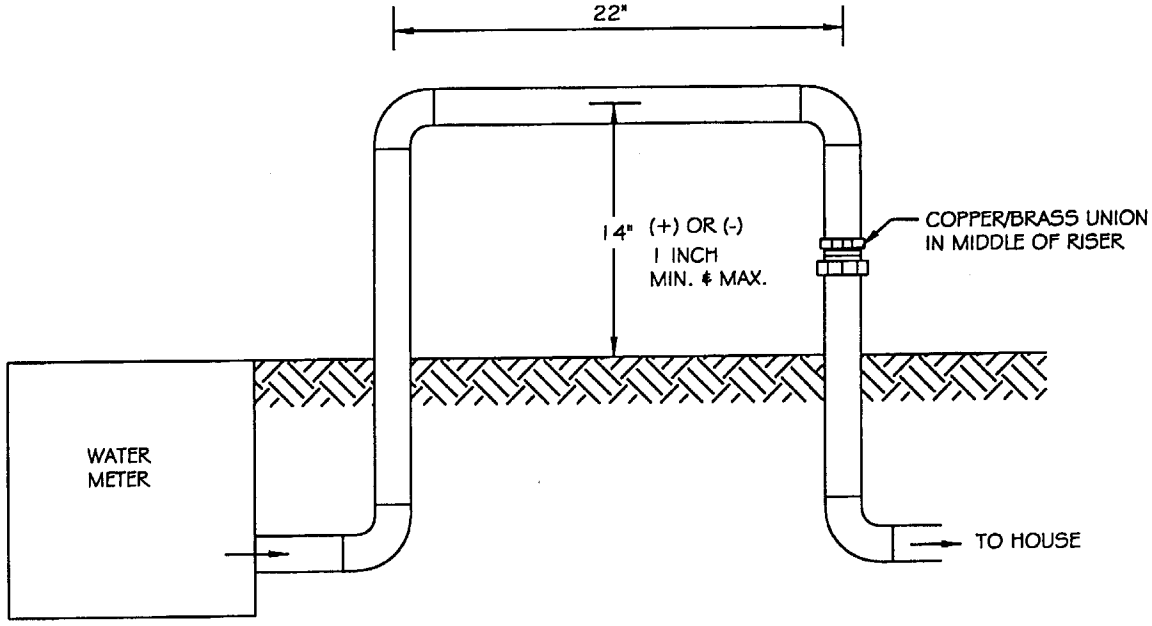

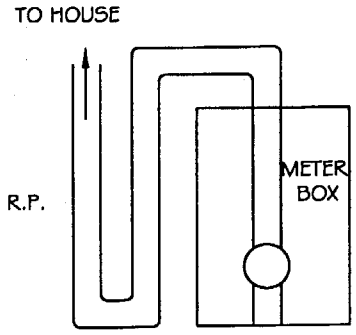

ALTERNATE INSTALLATION

SEE NOTE 8

NOTES:

1. ALL PIPE/FITTINGS TO BE TYPE 'K' RIGID COPPER.
2. INSTALL COPPER PIPE LOOP DIRECTLY BEHIND, DOWNSTREAM OF WATER METER/WATER METER BOX.
3. COPPER LOOP TO BE 14 INCHES ABOVE GRADE PLUS OR MINUS ONE INCH.
4. COPPER LOOP TO BE LEVEL MEASURED WITH CONTRACTOR'S BUBBLE LEVEL.
5. TOP OF LOOP TO BE ONE SOLID PIECE OF PIPE. NO COUPLINGS OR JOINTED PIPE.
6. COMPRESSION TYPE FITTINGS ARE NOT ALLOWED.
7. A COPPER/BRASS UNION TO BE INSTALLED IN MIDDLE OF DOWNSTREAM RISER.
8. COPPER LOOP MAY BE INSTALLED ADJACENT TO METER BOX ON A CASE BY CASE BASIS WITH A MAXIMUM OF 24 INCHES OF PIPE EXTENDED UPSTREAM OF COPPER LOOP TO ALLOW COPPER LOOP TO SIT ADJACENT TO METER/WATER BOX.
9. COPPER LOOP LENGTH TO BE 22 INCHES IN LENGTH MEASURED FROM CENTER TO CENTER OF EACH RISER PIPE.
10. THIS DETAIL IS TO BE USED IN CONJUNCTION WITH A RECLAIMED WATER SYSTEM.

C-302 **REPLACES** **103B**	CITY OF CHANDLER STANDARD DETAIL	**RESIDENTIAL BACKFLOW PREVENTION ASSEMBLY INSTALLATION - 1" OR UNDER**	APPROVED: Bryan D. Patterson CITY ENGINEER DATE: 11-17-99	DETAIL NO. **C-302** NTS

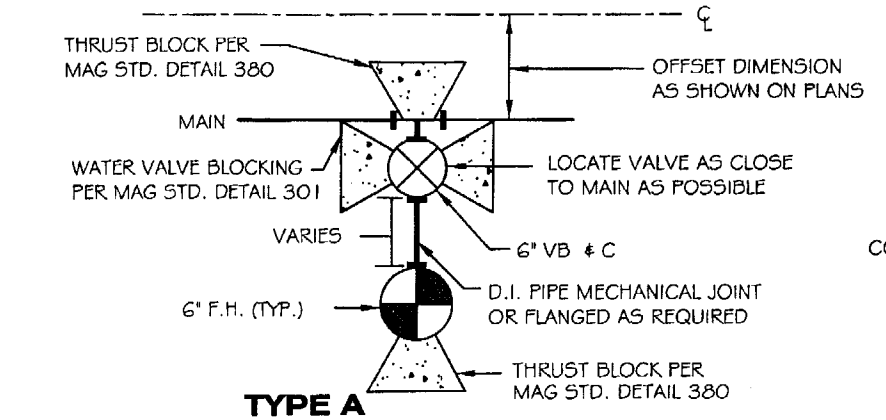

TYPE A

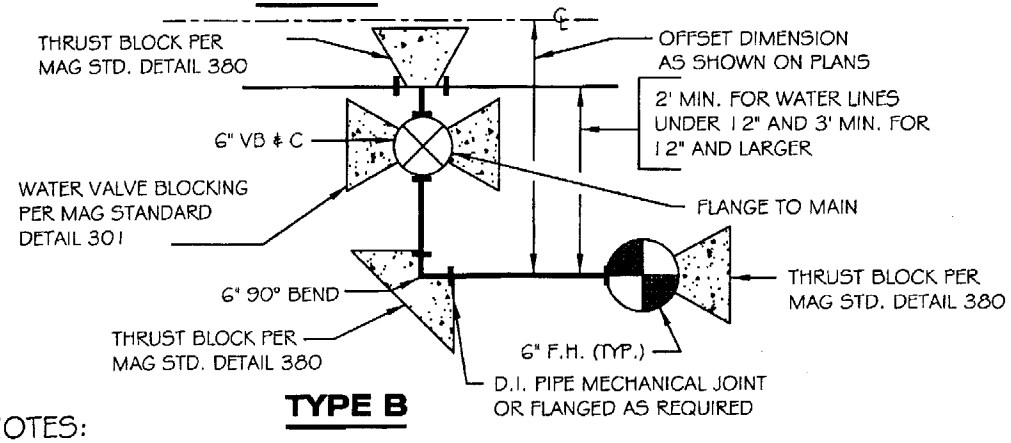

TYPE B

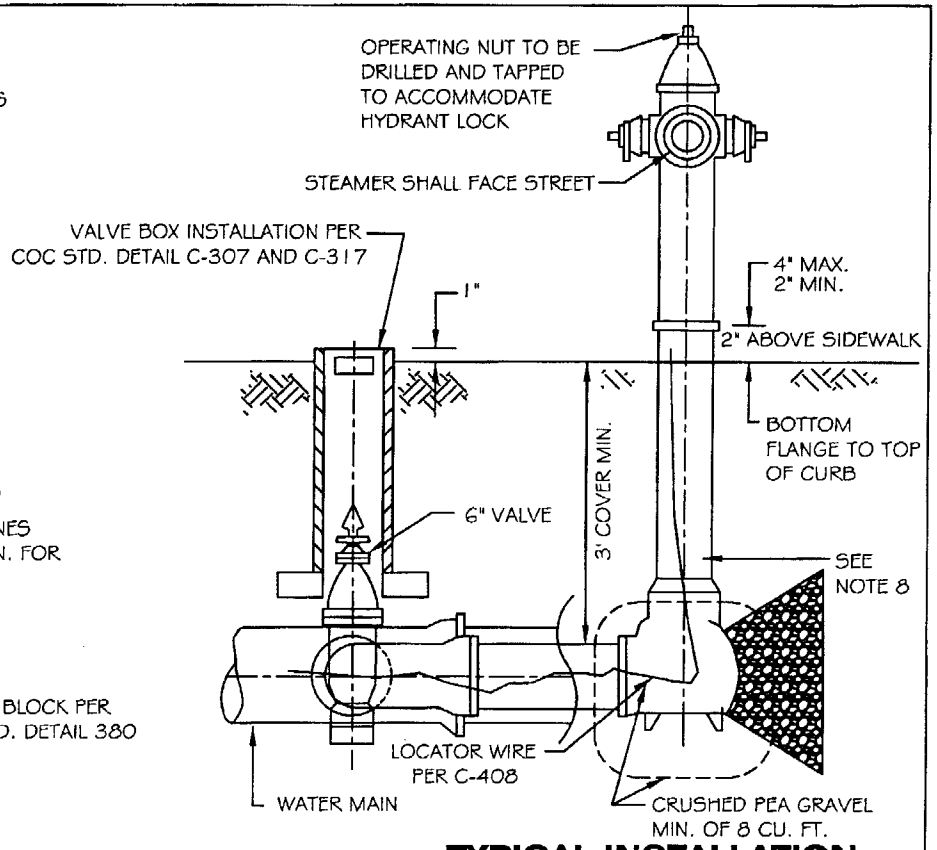

TYPICAL INSTALLATION

NOTES:

1. FIRE HYDRANT VALVES INCLUDING ALL FITTINGS & 45° BENDS SHALL BE RESTRAINED TO MAIN LINE TEE BY FLANGES.
2. FIRE HYDRANT SHALL BE MUELLER CENTURIAN, CLOW MEDALLION OR WATEROUS PACER.
3. CONNECTIONS SHALL BE 2-1/2" & 4-1/2" N.S. THREADS.
4. INSTALLATION OF HYDRANT SHALL INCLUDE INSTALLATION OF REFLECTOR ON ADJACENT STREET(S) PER DETAIL C-306.
5. FIRE HYDRANT SHALL BE LOCATED PER DETAIL C-305 A MIN. OF 6' BEHIND FACE OF CURB, AND 12 INCHES BEHIND SIDEWALK, RIGHT OF WAY PERMITTING, AND INSTALLED SIX FEET BEYOND CURB RETURNS FOR HYDRANTS LOCATED AT INTERSECTIONS.
6. INSTALL FIRE HYDRANT LOCK PER STANDARD DETAIL C-304, PUBLIC HYDRANTS ONLY.
7. CAP CHAINS SHALL BE REMOVED AND THREADS GREASED WITH MANUFACTURER APPROVED HYDRANT GREASE.
8. A MAXIMUM EXTENSION OF 1'-0" MAY BE USED.

DETAIL NO.					DETAIL NO.
C-303 NTS	CITY OF CHANDLER STANDARD DETAIL	**FIRE HYDRANT**	APPROVED: CITY ENGINEER DATE: 01/08/09		**C-303** NTS

NOTES:

- (A) KEY WRENCH
- (B) SWIVEL HOUSING
- (C) ACTIVATOR LOCK
- (D) RETAINING BOLT
- (E) INNER BARREL
- (F) MATING COLLAR
- (G) HYDRANT OPERATING NUT

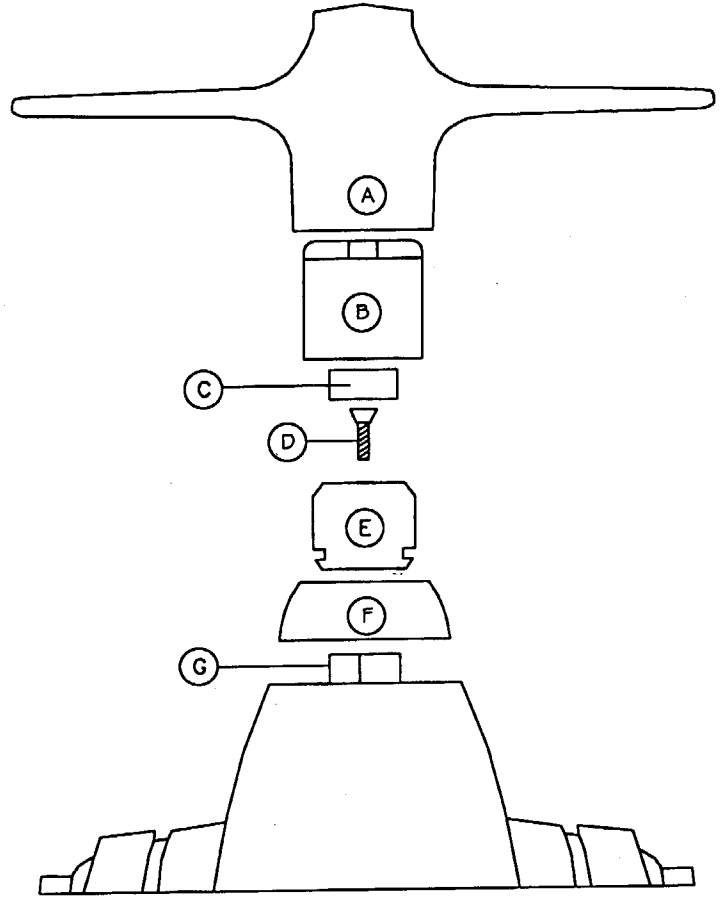

C-304 **REPLACES** **49A**	CITY OF CHANDLER STANDARD DETAIL	**FIRE HYDRANT LOCK**	APPROVED: CITY ENGINEER DATE: 11-19-99	DETAIL NO. **C-304** NTS

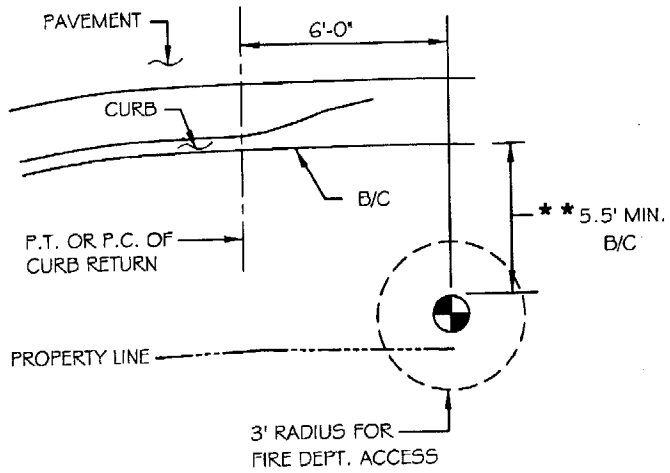

PARKWAY AREA, NO SIDEWALK

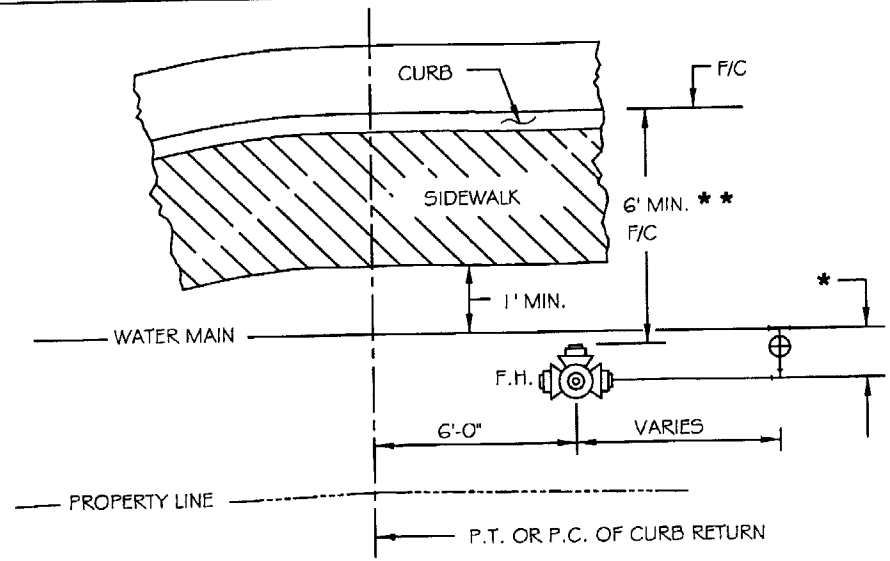

AREA WITH SIDEWALK

NOTES:

1. OBSTRUCTIONS SUCH AS UTILITY POLES, STREET SIGNS, IRRIGATION BOXES, FENCES, ETC., MUST NOT BE PLACED BETWEEN CURB AND HYDRANT.
2. * DIMENSION PER COC STANDARD DETAIL C-303.
3. DIMENSIONS SHOWN ON APPROVED CONSTRUCTION DRAWINGS SUPERSEDE LOCATIONS SHOWN HERE.
4. ON LOCATIONS IN MIDBLOCK, THE FIRE HYDRANT WILL BE ALIGNED WITH A PROPERTY LINE AND 6' MINIMUM FROM DRIVEWAYS.
5. COC STANDARD DETAIL C-303, TYPE B INSTALLATION SHOWN.
6. ALL FIRE HYDRANTS INSTALLED PER STANDARD DETAIL C-303 SHALL BE LOCATED IN ACCORDANCE WITH THIS DETAIL.
7. ** MINIMUM DIMENSION MUST BE SIDEWALK WIDTH PLUS ONE (1) FOOT OR SIX (6) FEET FROM FACE OF CURB, WHICHEVER IS GREATER.
8. IN INDUSTRIAL/COMMERCIAL ZONES A MINIMUM OF 6' FROM DRIVEWAYS SHALL BE MAINTAINED WITH VALVE INSTALLED AWAY FROM DRIVEWAY.

DETAIL NO.					DETAIL NO.
C-305	CITY OF CHANDLER STANDARD DETAIL	LOCATIONS FOR NEW FIRE HYDRANT	APPROVED: CITY ENGINEER		C-305
NTS			DATE: 01/08/09		NTS

FIGURE 1
TWO LANE STREET

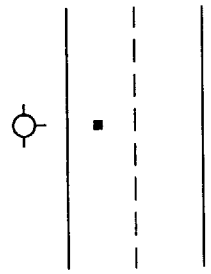

FIGURE 2
MULTI-LANE STREET

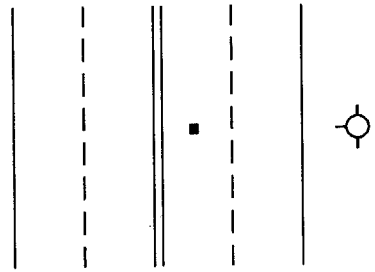

FIGURE 3
TWO LANE STREET AT INTERSECTION

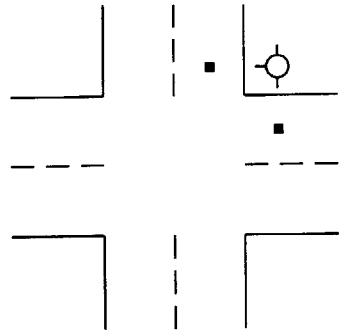

FIGURE 4
FOUR LANE STREET WITH TURN LANE AT INTERSECTION

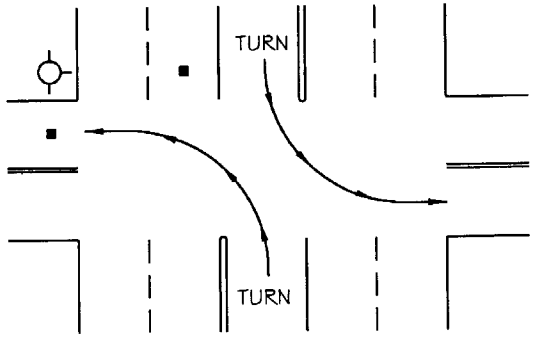

FIGURE 5
TWO LANE STREET AT INTERSECTION

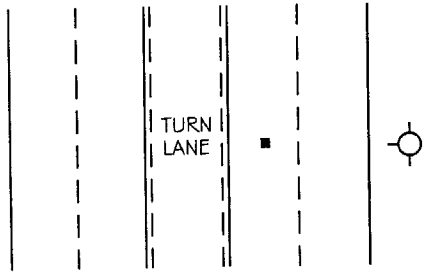

FIGURE 6
FREEWAYS AND EXPRESSWAYS

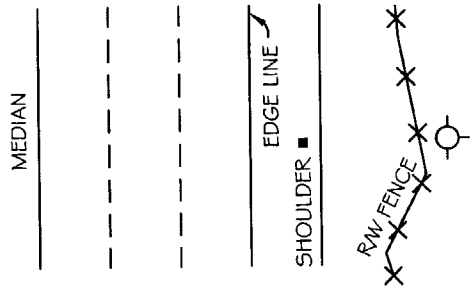

FIGURE 7
STATE HIGHWAY MULTI-LANE STREET WITH TURN LANE

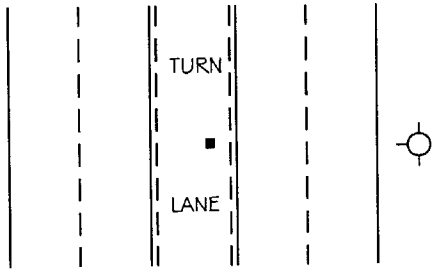

NOTES:

1. ALL MARKERS TO BE STIMSONITE MODEL 911AB (BLUE) OR APPROVED EQUAL.
2. MARKERS TO BE LOCATED IN CENTER OF LANE EXCEPT FIGURES 6 AND 7 WHICH WILL BE LOCATED 1 FOOT FROM EDGE OF LANE.
3. FOR 4 LANE OR 6 LANE STREETS WITH MEDIAN, PLACE THE MARKER IN THE CENTER OF THE INSIDE THRU LANE.

C-306 REPLACES **101**	CITY OF CHANDLER STANDARD DETAIL	**FIRE HYDRANT REFLECTOR LOCATIONS**	APPROVED: CITY ENGINEER DATE: 2/26/07	DETAIL NO. **C-306** NTS

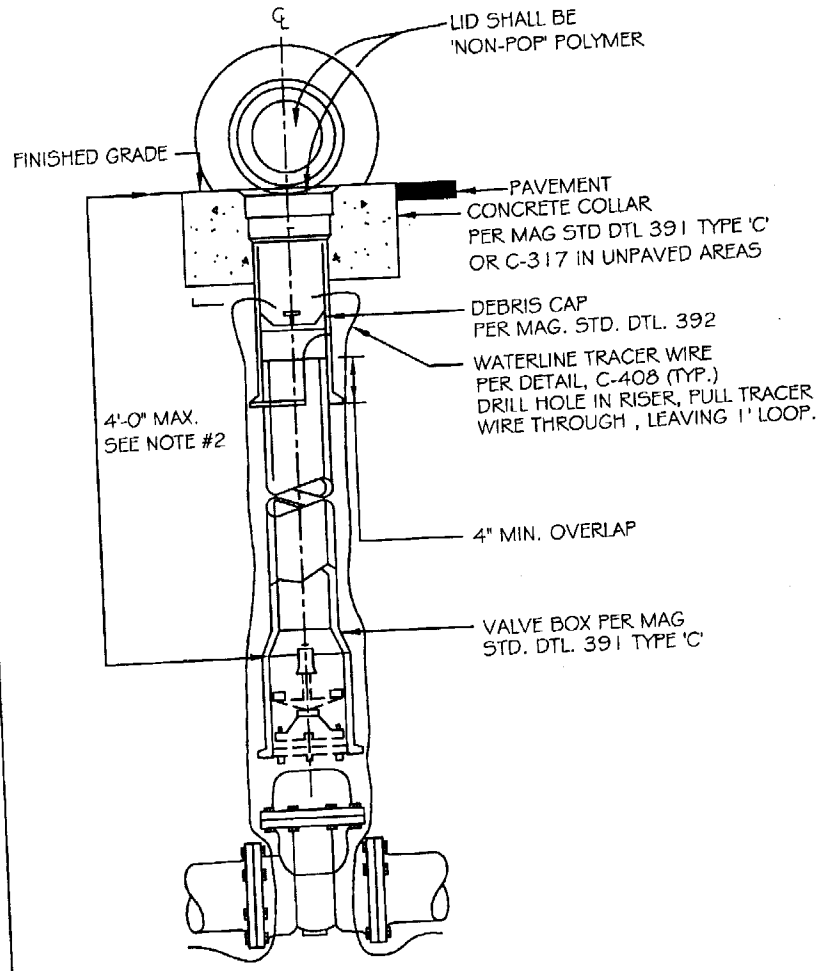

NOTES:

1. IN UNPAVED AREAS, CONCRETE COLLAR SHALL CONFORM TO DETAIL C-317.
2. AN EXTENSION SHAFT PER MAG. STD. DTL. 391 SHALL BE PROVIDED WHERE THE VALVE OPERATING NUT IS MORE THAN 4'-0" BELOW FINISH GRADE.
3. THE EXTENSION 2" OPERATOR SHALL BE FIRMLY TIGHTENED TO THE VALVE NUT.
4. BACKFILL SHALL BE 1/2 SACK CLSM. PER MAG. SPECIFICATION 718.
5. VALVE BOXES SHALL NOT BE INSTALLED WITHIN CONCRETE GUTTER, SIDEWALK, RAMPS OR VALLEY GUTTER.

DETAIL NO. **C-307** NTS	CITY OF CHANDLER STANDARD DETAIL	**VALVE BOX INSTALLATION (POTABLE WATER)**	APPROVED: CITY ENGINEER DATE: 01/08/09	DETAIL NO. **C-307** NTS

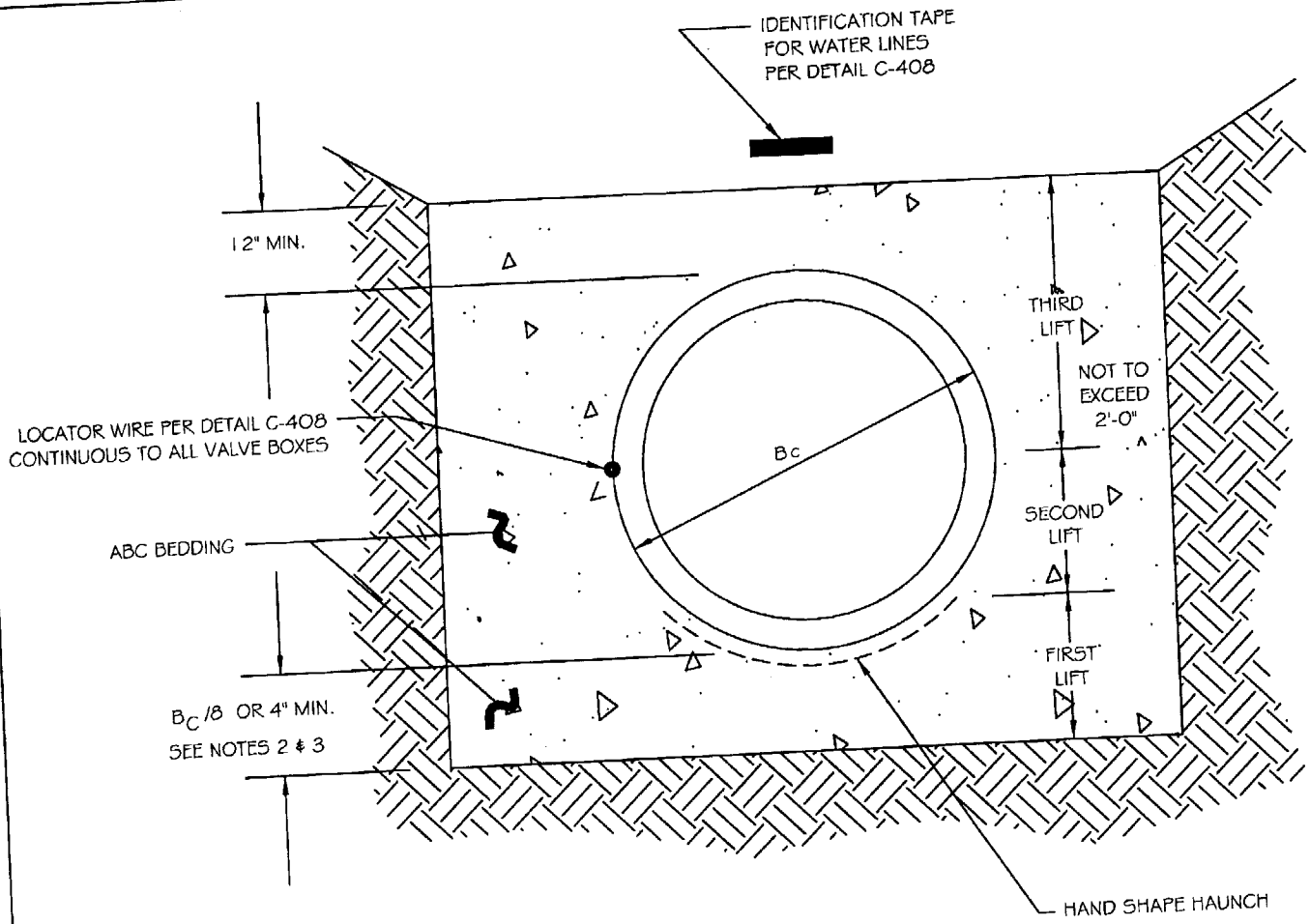

NOTES:

1. TRENCH WIDTH IN ACCORDANCE WITH MAG STD. TABLE 601-1.
2. MINIMUM 4" FOR PIPES 12" OR SMALLER.
3. MINIMUM 6" FOR PIPES LARGER THAN 12".

DETAIL NO. **C-308** NTS	CITY OF CHANDLER STANDARD DETAIL	**WATER PIPE BEDDING DETAIL**	APPROVED: CITY ENGINEER DATE: 01/08/09	DETAIL NO. **C-308** NTS

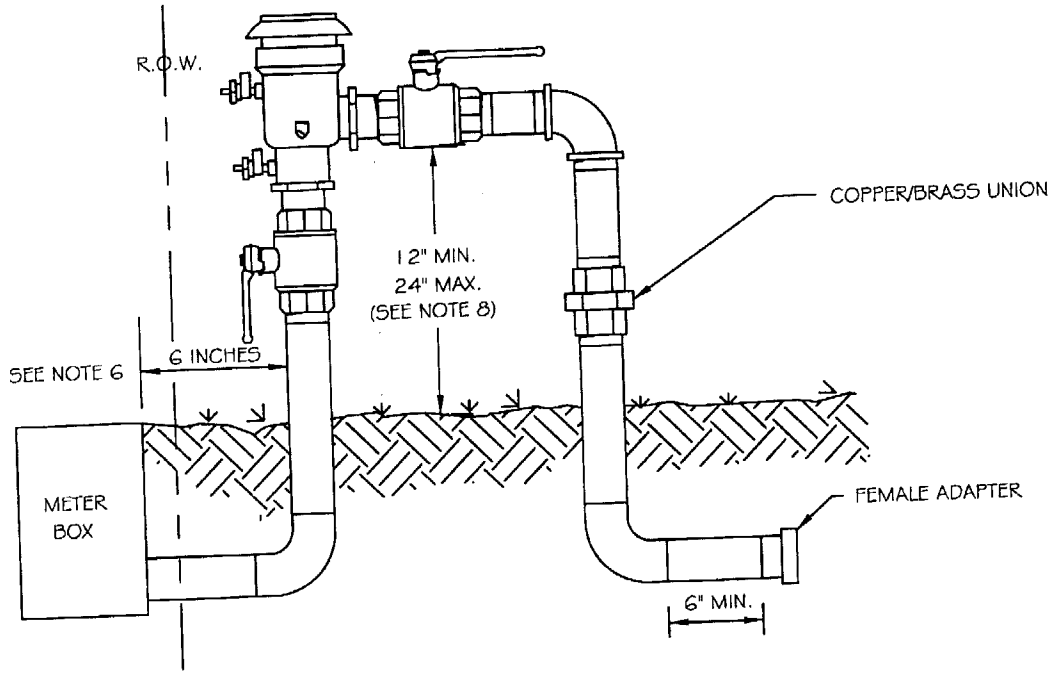

NOTES:

1. ASSEMBLY SHALL BE APPROVED BY UNIVERSITY OF SOUTHERN CALIFORNIA (USC) FOUNDATION FOR CROSS-CONNECTION CONTROL AND HYDRAULIC RESEARCH. LIST OF APPROVED ASSEMBLIES ON FILE AT CIVIL ENGINEERING.
2. SHUTOFF VALVES SHALL BE RESILIENT BALL TYPE WITH REMOVABLE HANDLES.
3. ALL PIPE AND FITTINGS SHALL BE TYPE 'K' RIGID COPPER. COMPRESSION FITTINGS ARE NOT ALLOWED.
4. TEST COCKS SHALL BE FITTED WITH BRASS PLUGS INSTALLED WITH TEFLON TAPE.
5. NO TAPS SHALL BE ALLOWED BETWEEN THE METER AND THE BACKFLOW PREVENTION ASSEMBLY.
6. INSTALL BACKFLOW PREVENTION ASSEMBLY INLINE AND WITHIN 6 INCHES OF THE METER BOX, IMMEDIATELY DOWNSTREAM OF THE LINESETTER.
7. THE COPPER/BRASS UNION MAY NOT BE REQUIRED IF THE ASSEMBLY INCORPORATES THE UNION.
8. ASSEMBLY MUST BE INSTALLED 12 INCHES ABOVE THE HIGHEST OUTLET OF THE SYSTEM. IF THIS DISTANCE EXCEEDS 24 INCHES, A REDUCED PRESSURE BACKFLOW PREVENTION ASSEMBLY PER DETAIL C-311 MUST BE INSTALLED.

DETAIL NO. **C-309** NTS	CITY OF CHANDLER STANDARD DETAIL	**PRESSURE VACUUM BREAKER BACKFLOW PREVENTION ASSEMBLY INSTALLATION - 2" AND UNDER**	APPROVED: CITY ENGINEER DATE: 01/08/09	DETAIL NO. **C-309** NTS

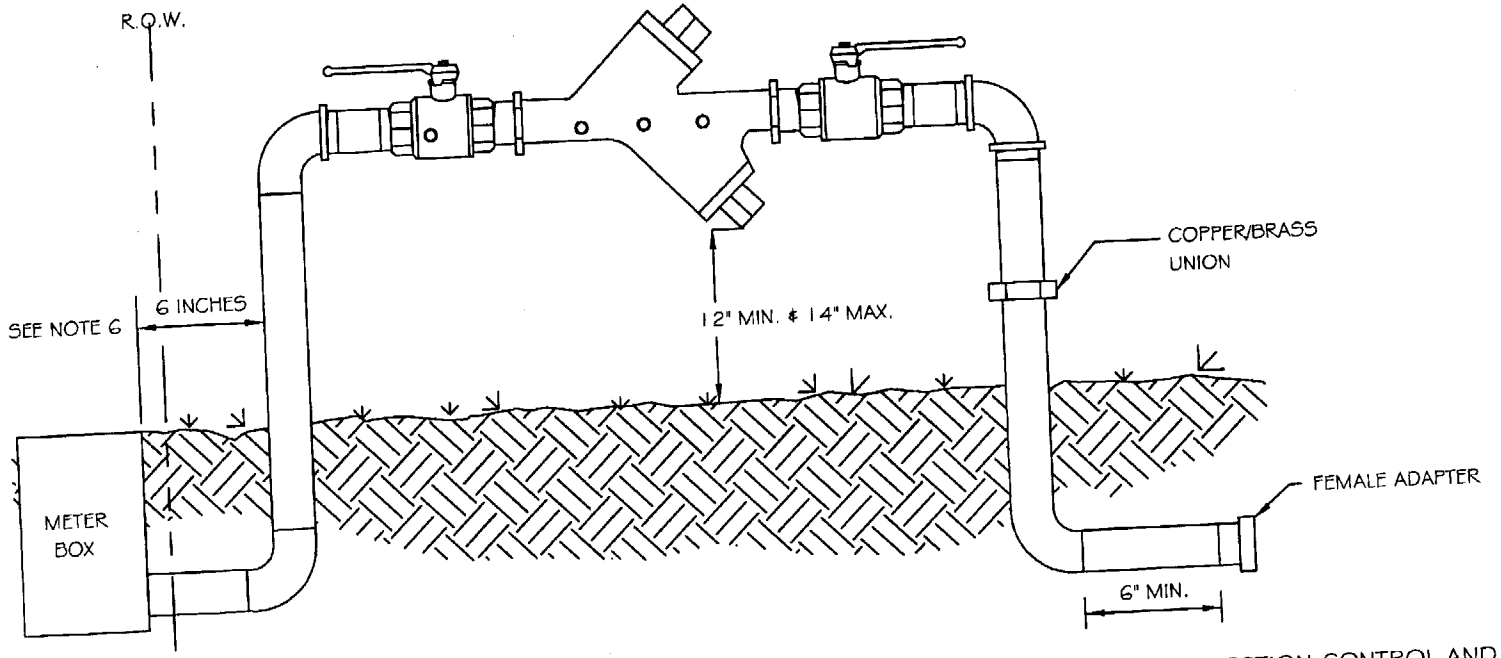

NOTES:

1. ASSEMBLY SHALL BE APPROVED BY UNIVERSITY OF SOUTHERN CALIFORNIA (USC) FOUNDATION FOR CROSS-CONNECTION CONTROL AND HYDRAULIC RESEARCH. LIST OF APPROVED ASSEMBLIES ON FILE AT CIVIL ENGINEERING.
2. SHUTOFF VALVES SHALL BE RESILIENT BALL TYPE WITH REMOVABLE HANDLES.
3. ALL PIPE AND FITTINGS SHALL BE TYPE 'K' RIGID COPPER. COMPRESSION FITTINGS ARE NOT ALLOWED.
4. TEST COCKS SHALL BE FITTED WITH BRASS PLUGS INSTALLED WITH TEFLON TAPE.
5. NO TAPS SHALL BE ALLOWED BETWEEN THE METER AND THE BACKFLOW PREVENTION ASSEMBLY.
6. INSTALL BACKFLOW PREVENTION ASSEMBLY INLINE AND WITHIN 6 INCHES OF THE METER BOX, IMMEDIATELY DOWNSTREAM OF THE LINESETTER.
7. THE COPPER/BRASS UNION MAY NOT BE REQUIRED IF THE ASSEMBLY INCORPORATES THE UNION.
8. BACKFLOW PREVENTION ASSEMBLY MUST BE LEVEL AND INSTALLED A MINIMUM OF 12 INCHES AND A MAXIMUM OF 14 INCHES FROM ASSEMBLY BODY TO FINAL GRADE.
9. ALL PIPE, RECLAIMED AND POTABLE, SHALL BE INSTALLED WITH COPPER TRACING WIRE AND ATTACHED TO EACH VALVE.

DETAIL NO. **C-310** NTS	CITY OF CHANDLER STANDARD DETAIL	**DOUBLE-CHECK VALVE BACKFLOW PREVENTION INSTALLATION - 3" AND UNDER**	APPROVED: CITY ENGINEER DATE: 01/08/09	DETAIL NO. **C-310** NTS

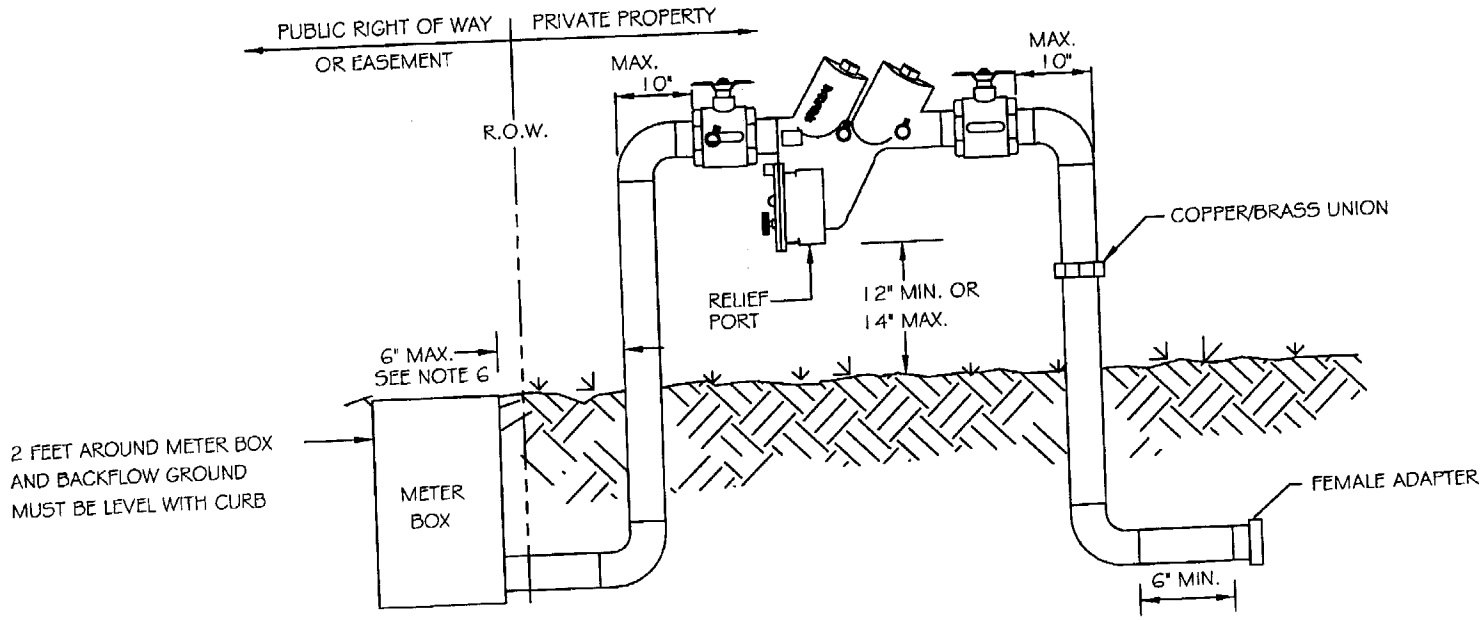

NOTES:

1. ASSEMBLY SHALL BE APPROVED BY UNIVERSITY OF SOUTHERN CALIFORNIA (USC) FOUNDATION FOR CROSS-CONNECTION CONTROL AND HYDRAULIC RESEARCH. LIST OF APPROVED ASSEMBLIES ON FILE AT CIVIL ENGINEERING.
2. SHUTOFF VALVES SHALL BE RESILIENT BALL TYPE WITH REMOVABLE HANDLES.
3. ALL PIPE AND FITTINGS SHALL BE TYPE 'K' RIGID COPPER. COMPRESSION FITTINGS ARE NOT ALLOWED.
4. TEST COCKS SHALL BE FITTED WITH BRASS PLUGS INSTALLED WITH TEFLON TAPE.
5. NO TAPS SHALL BE ALLOWED BETWEEN THE METER AND THE BACKFLOW PREVENTION ASSEMBLY.
6. INSTALL BACKFLOW PREVENTION ASSEMBLY INLINE AND WITHIN 6 INCHES OF THE METER BOX, IMMEDIATELY DOWNSTREAM OF THE LINESETTER.
7. THE COPPER/BRASS UNION MAY NOT BE REQUIRED IF THE ASSEMBLY INCORPORATES THE UNION.
8. INSTALL BACKFLOW PREVENTION ASSEMBLY WITH RELIEF PORT FACING TOWARD THE GROUND.
9. BACKFLOW PREVENTION INSTALLATION MUST BE LEVEL, AND INSTALLED A MINIMUM OF 12 INCHES AND A MAXIMUM OF 14 INCHES FROM RELIEF PORT TO FINAL GRADE.

DETAIL NO. **C-311** NTS	CITY OF CHANDLER STANDARD DETAIL	**REDUCED PRESSURE-PRINCIPLE BACKFLOW PREVENTION ASSEMBLY INSTALLATION - 3" AND UNDER**	APPROVED: CITY ENGINEER DATE: 01/08/09	DETAIL NO. **C-311** NTS

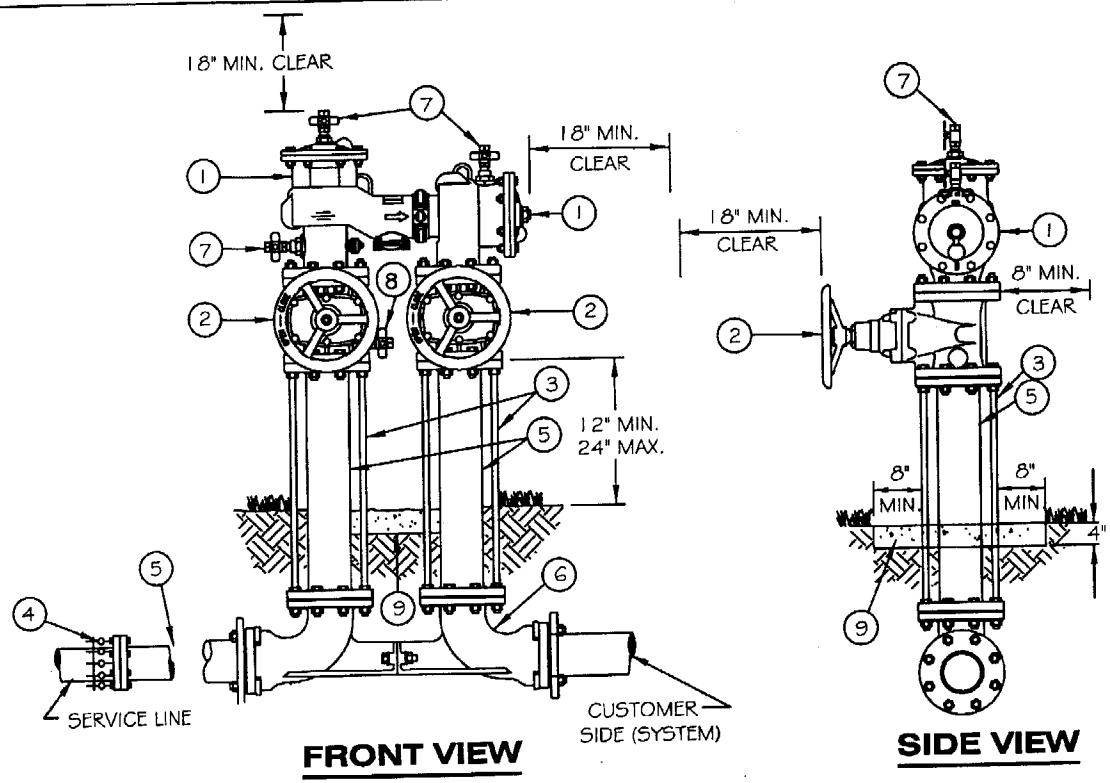

LIST OF MATERIALS

1. APPROVED DOUBLE CHECK VALVE BACKFLOW PREVENTION ASSEMBLY. (DOUBLE CHECK DETECTOR ASSEMBLY INSTALLATION SIMILAR).
2. N.R.S. GATE VALVE.
3. 3/4" ZINC COATED THREADED ROD BOLTED TO FLANGES, BOTH SIDES TYPICAL EQUAL TENSION MINIMUM FOUR RODS, EVENLY SPACED.
4. FLANGED ADAPTER, (WHEN REQUIRED).
5. PIPE SPOOL. (FLANGED DIP)
6. VALVE SETTER.
7. TEST COCKS, (3 REQUIRED) WITH BRASS PLUGS USING ONLY TEFLON TAPE.
8. TEST COCK WITH A STEEL 90° ELL WITH BRASS PLUG USING ONLY TEFLON TAPE.
9. 4" CLASS "B" CONCRETE PER MAG STANDARD SPECIFICATIONS 725.

SCREENING METHOD

1. SCREEN WALLS, PLANT MATERIAL BERMING AND/OR BUILDING ORIENTATION SHALL BE SUBMITTED TO DEVELOPMENT SERVICES FOR REVIEW AND APPROVAL PRIOR TO START OF CONSTRUCTION.
2. METHOD OF SCREENING USED MAY REQUIRE FDC'S TO BE REMOTELY LOCATED. FDC LOCATION AND METHOD OF INSTALLATION SHALL BE INCLUDED ON SCREENING PLAN SUBMITTED TO DEVELOPMENT SERVICES FOR REVIEW AND APPROVAL.

NOTES:

1. LIST OF LATEST APPROVED ASSEMBLIES ON FILE AT ENGINEERING. COPIES AVAILABLE.
2. ASSEMBLY SHALL BE AS APPROVED BY UNIVERSITY OF SOUTHERN CALIFORNIA (USC) FOUNDATION FOR CROSS-CONNECTION CONTROL AND HYDRAULIC RESEARCH.
3. ABOVE GROUND PORTION OF ASSEMBLY TO BE PAINTED LIGHT TAN OR EQUIVALENT BACKGROUND COLOR.
4. WHEN UTILIZED FOR RECLAIMED WATER, THE WORDS 'RECLAIMED WATER' SHALL BE STENCILED ON THE ASSEMBLY USING THE COLOR 'SAFETY PURPLE'.

DETAIL NO.				DETAIL NO.
C-312 NTS	CITY OF CHANDLER STANDARD DETAIL	**DOUBLE CHECK VALVE BACKFLOW PREVENTION ASSEMBLY 2 1/2", 4", 6", 8" 10" PRIVATE DOMESTIC WATER MAIN**	APPROVED: [signature] CITY ENGINEER DATE: 01/08/09	**C-312** NTS

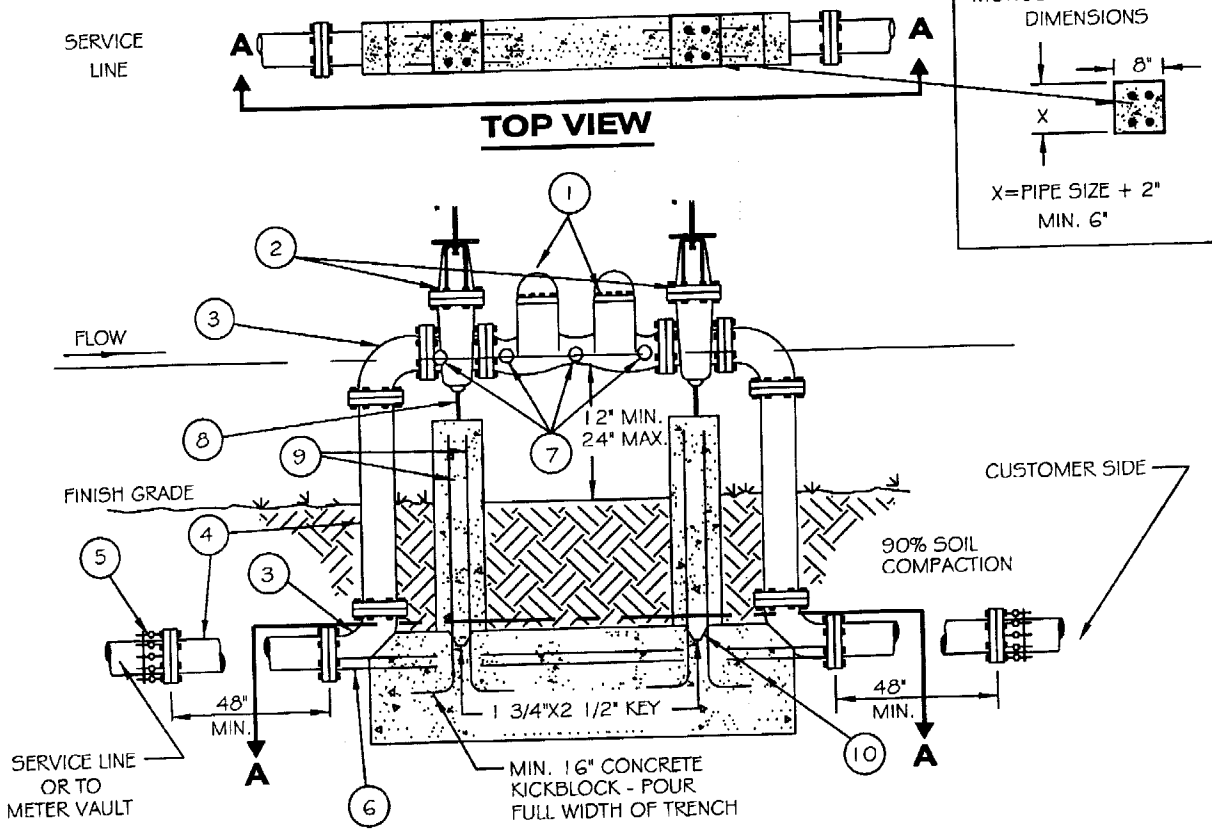

LIST OF MATERIALS

1. APPROVED DOUBLE CHECK VALVE BACKFLOW PREVENTION ASSEMBLY. (DOUBLE CHECK DETECTOR ASSEMBLY INSTALLATION SIMILAR).
2. O.S.&Y. GATE VALVE, N.R.S. GATE VALVE, IF PREFERRED.
3. 90° ELL. (FLANGED D.I.P.)
4. PIPE SPOOL (FLANGED D.I.P.)
5. FLANGED ADAPTER (WHEN REQUIRED).
6. 3/4" ZINC COATED THREADED ROD, BOLTED TO FLANGES AS SHOWN, BOTH SIDES TYPICAL EQUAL TENSION.
7. TEST COCKS (4 REQUIRED WITH BRASS PLUGS USING ONLY TEFLON TAPE.)
8. ADJUSTABLE PIPE SUPPORT MUST BE PERMANENTLY ATTACHED TO BASE, 6" MAXIMUM HEIGHT.
9. #6 REINFORCING STEEL, DEFORMED BAR, 4" APART, EVENLY SPACED.
10. CONSTRUCTION JOINT KEY TO BE 1 3/4" X 2 1/2".

SCREENING METHOD

1. SCREEN WALLS, PLANT MATERIAL, BERMING AND/OR BUILDING ORIENTATION SHALL BE SUBMITTED TO DEVELOPMENT SERVICES FOR REVIEW AND APPROVAL PRIOR TO START OF CONSTRUCTION.

NOTES:

1. LIST OF LATEST APPROVED ASSEMBLIES ON FILE AT ENGINEERING. COPIES AVAILABLE.
2. ASSEMBLY SHALL BE AS APPROVED BY UNIVERSITY OF SOUTHERN CALIFORNIA (USC) FOUNDATION FOR CROSS-CONNECTION CONTROL AND HYDRAULIC RESEARCH.
3. ABOVE GROUND PORTION OF ASSEMBLY TO BE PAINTED LIGHT TAN OR EQUIVALENT BACKGROUND COLOR.
4. WHEN UTILIZED FOR RECLAIMED WATER, THE WORDS 'RECLAIMED WATER' SHALL BE STENCILED ON THE ASSEMBLY USING THE COLOR 'SAFETY PURPLE'.

DETAIL NO. C-314 NTS	CITY OF CHANDLER STANDARD DETAIL	**DOUBLE CHECK VALVE BACKFLOW PREVENTION ASSEMBLY 3", 4", 6", 8", 10"**	APPROVED: CITY ENGINEER DATE: 01/08/09	DETAIL NO. **C-314** NTS

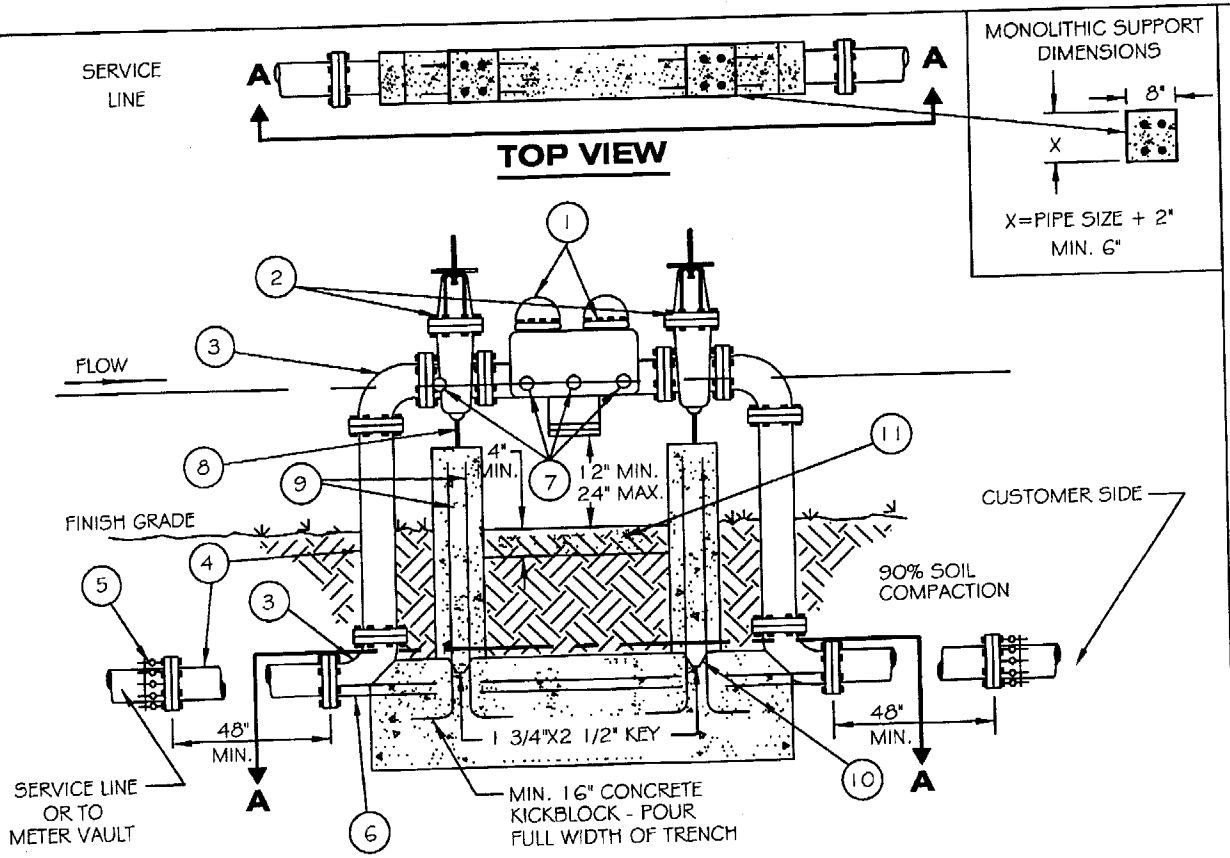

SIDE VIEW

LIST OF MATERIALS

1. APPROVED REDUCED PRESSURE PRINCIPLE BACKFLOW PREVENTION ASSEMBLY.
2. O.S.&Y. GATE VALVE, N.R.S. GATE VALVE, IF PREFERRED.
3. 90° ELL. (FLANGED D.I.P.)
4. PIPE SPOOL (FLANGED D.I.P.)
5. FLANGED ADAPTER (WHEN REQUIRED).
6. 3/4" ZINC COATED THREADED ROD, BOLTED TO FLANGES AS SHOWN, BOTH SIDES TYPICAL EQUAL TENSION.
7. TEST COCKS (4 REQUIRED WITH BRASS PLUGS USING ONLY TEFLON TAPE.)
8. ADJUSTABLE PIPE SUPPORT MUST BE PERMANENTLY ATTACHED TO BASE, 6" MAXIMUM HEIGHT.
9. #6 REINFORCING STEEL, DEFORMED BAR, 4" APART, EVENLY SPACED.
10. CONSTRUCTION JOINT KEY TO BE 1 3/4" X 2 1/2".
11. 4" CONCRETE SPLASH PAD.

SCREENING METHOD

1. SCREEN WALLS, PLANT MATERIAL, BERMING AND/OR BUILDING ORIENTATION SHALL BE SUBMITTED TO DEVELOPMENT SERVICES FOR REVIEW AND APPROVAL PRIOR TO START OF CONSTRUCTION.

NOTES:

1. LIST OF LATEST APPROVED ASSEMBLIES ON FILE AT ENGINEERING. COPIES AVAILABLE.
2. ASSEMBLY SHALL BE AS APPROVED BY UNIVERSITY OF SOUTHERN CALIFORNIA (USC) FOUNDATION FOR CROSS-CONNECTION CONTROL AND HYDRAULIC RESEARCH.
3. ABOVE GROUND PORTION OF ASSEMBLY TO BE PAINTED LIGHT TAN OR EQUIVALENT BACKGROUND COLOR.
4. WHEN UTILIZED FOR RECLAIMED WATER, THE WORDS 'RECLAIMED WATER' SHALL BE STENCILED ON THE ASSEMBLY USING THE COLOR 'SAFETY PURPLE'.

DETAIL NO. C-315 NTS	CITY OF CHANDLER STANDARD DETAIL	**REDUCED PRESSURE PRINCIPLE ASSEMBLY 3", 4", 6", 8", 10"**	APPROVED: CITY ENGINEER DATE: 01/08/09	DETAIL NO. C-315 NTS

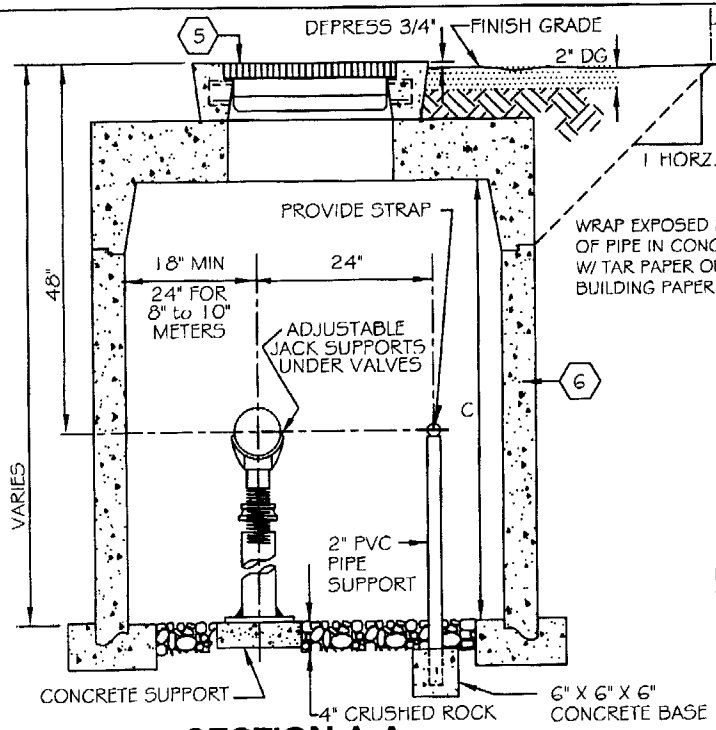

SECTION A-A

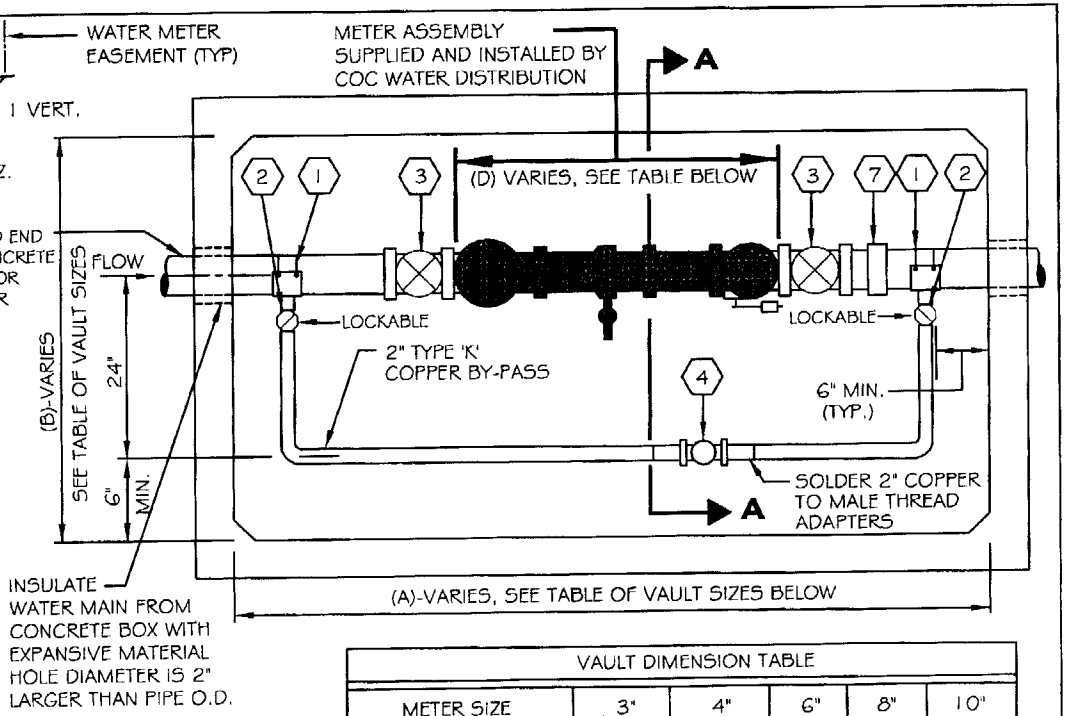

VAULT DIMENSION TABLE					
METER SIZE	3"	4"	6"	8"	10"
LENGTH (A)	8' - 4"	10' - 6"	12'	14'	15' - 0"
WIDTH (B)	4' - 4"	5'	5'	5' - 6"	5' - 6"
INSIDE HEIGHT (C)	4' - 6"	5' - 0"	5' - 6"	6' - 0"	6' - 6"
METER ASSEMBLY (D) BLOCK OUT COMPOUND METER	3' - 8"	4' - 5"	6' - 8"	8' - 1"	10' - 0"
TURBINE METER	3' - 3"	3' - 11"	6' - 7"	7' - 11"	9' - 0"

NOTES:

1. METER VAULTS MAY BE EITHER CAST-IN-PLACE OR PRE-CAST CONCRETE. SEE MAG STANDARD DETAIL 321 FOR VAULT CONSTRUCTION, 3" TO 6" METERS.
2. FOR LARGER THAN 6" METERS SPECIAL VAULT DESIGN IS REQUIRED. SUBMIT FOR APPROVAL.
3. STAINLESS BOLTS AND NUTS REQUIRED FOR ENTIRE ASSEMBLY.
4. PIPE MAIN SHALL BE FULLY RESTRAINED BEYOND INLET AND OUTLET OF VAULT.
5. CONTRACTOR SHALL PROVIDE FLANGED SPOOL IN METER ASSEMBLY BLOCK-OUT TO PROVE CORRECT ALIGNMENT. SPOOL MAY BE SALVAGED AFTER METER INSTALLATION.
6. VAULT LID SHALL NOT BE INSTALLED UNTIL AFTER METER IS INSTALLED BY CITY. CALL (480) 782-3700.

⬡ LEGEND:

1. DOUBLE STRAP ALL BRONZE SERVICE SADDLES.
2. 2" CORP STOP WITH BRONZE OR BRASS BODY, LOCKABLE, TO NORMALLY BE CLOSED.
3. O.S. & Y. GATE VALVE, FLANGED WITH HAND WHEEL OPEN LEFT, AND RISING STEM.
4. 2" BRONZE CHECK VALVE. (LOW ZINC)
5. METER HATCH PER SYRACUSE CASTINGS "CH-AL" STYLE PEDESTRIAN RATED ALUMINUM WITH SLAM LOCK OR APPROVED EQUAL. 3" & 4" - CH-5AL 42" X 42", 6" THROUGH 10" - CHD-9AL 36" X 60". UPON APPROVAL FROM CITY, DRILL 1-¾" HOLE(S) IN HATCH FOR METER TRANSMITTER(S).
6. METER VAULT PER UTILITY VAULT COC STANDARD DETAIL OR APPROVED EQUAL.
7. PROVIDE 1" TO 1-1/2" OF PLAY IN THE FLEX COUPLING - CAULDER OR EQUAL.

DETAIL NO.					DETAIL NO.
C-316 NTS	CITY OF CHANDLER STANDARD DETAIL	**3" TO 10" METER VAULT**	APPROVED: CITY ENGINEER DATE: June 12/08		**C-316** NTS

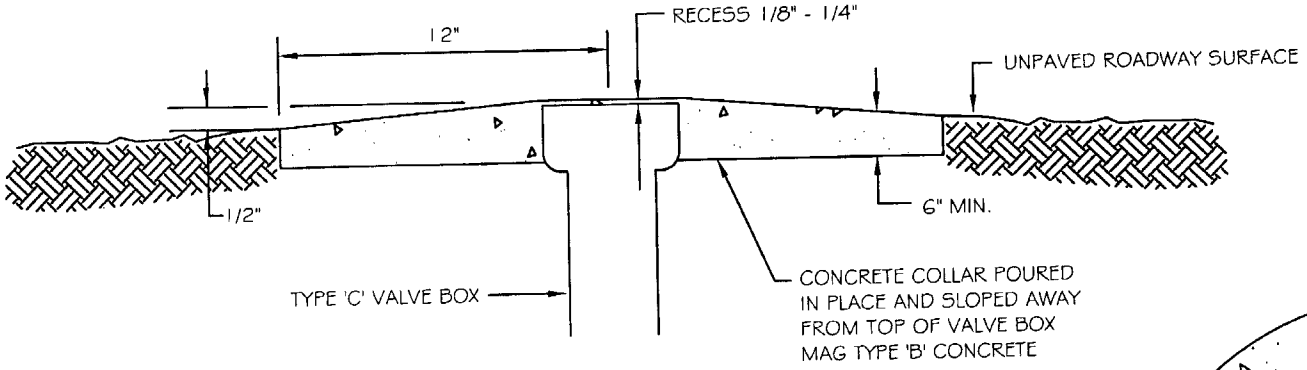

SIDE VIEW

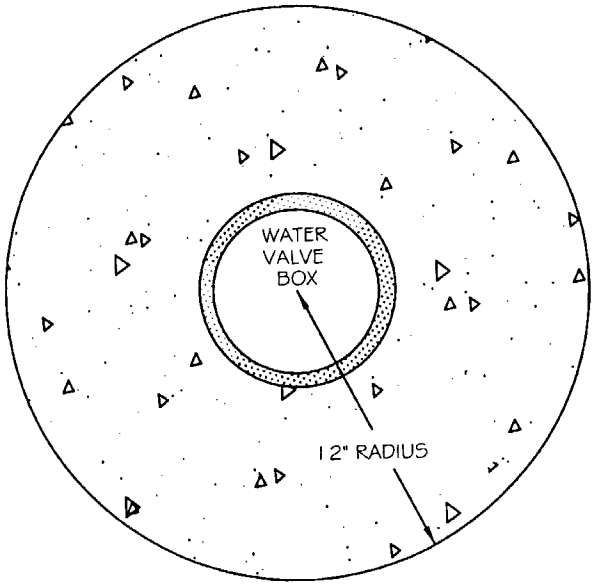

TOP VIEW

C-317 **REPLACES** **52**	CITY OF CHANDLER STANDARD DETAIL	**CONCRETE COLLAR DETAIL** **WATER VALVE BOX PLACEMENT** **UNPAVED AREAS**	APPROVED: Elizabeth Burke CITY ENGINEER DATE: January 11, 2002	DETAIL NO. **C-317** NTS

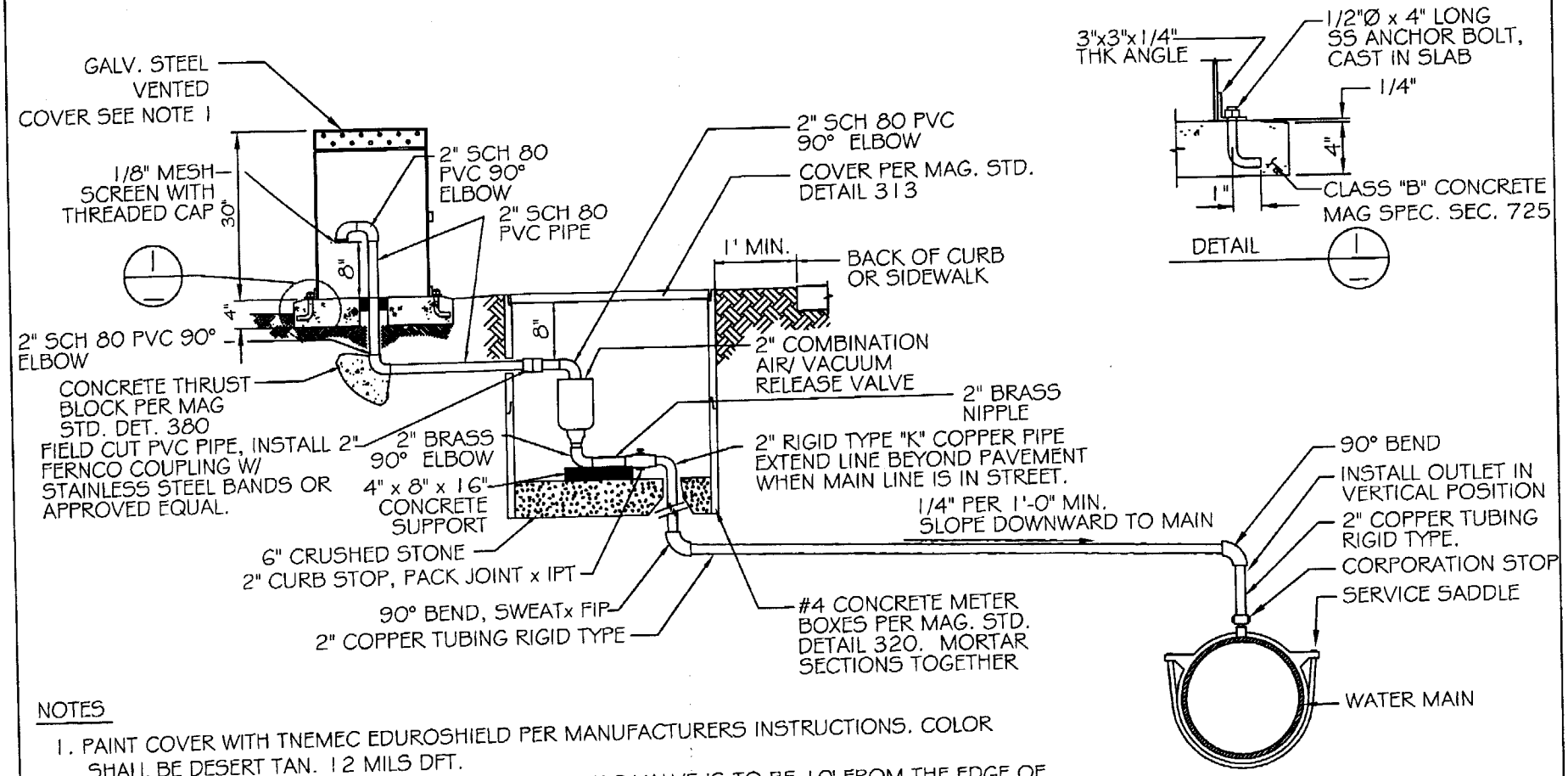

NOTES

1. PAINT COVER WITH TNEMEC EDUROSHIELD PER MANUFACTURERS INSTRUCTIONS. COLOR SHALL BE DESERT TAN. 12 MILS DFT.
2. IN UNIMPROVED AREAS, PLACEMENT OF THE AIR/VAC VALVE IS TO BE 10' FROM THE EDGE OF PAVEMENT. SET PAD ELEVATION 2" ABOVE ADJACENT GROUND.
3. FOR RECLAIMED WATER APPLICATIONS THE WORDS: "CAUTION: RECLAIMED WATER DO NOT DRINK" SHALL BE STENCILED WITH 3/4" LETTER IN PURPLE (PANTONE 512). ON A WHITE BACKGROUND.
4. AIR RELEASE/VACUUM VALVE SHALL BE APCO-145C OR APPROVED EQUAL.

DETAIL NO. **C-319** NTS	CITY OF CHANDLER STANDARD DETAIL	**2" COMBINATION AIR/VACUUM VALVE ASSEMBLY**	APPROVED: CITY ENGINEER DATE: 01/08/09	DETAIL NO. **C-319** NTS

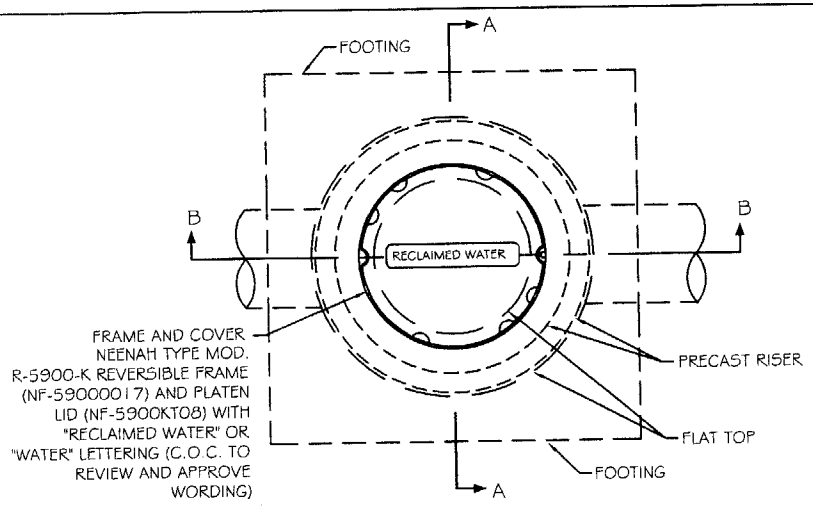

PLAN

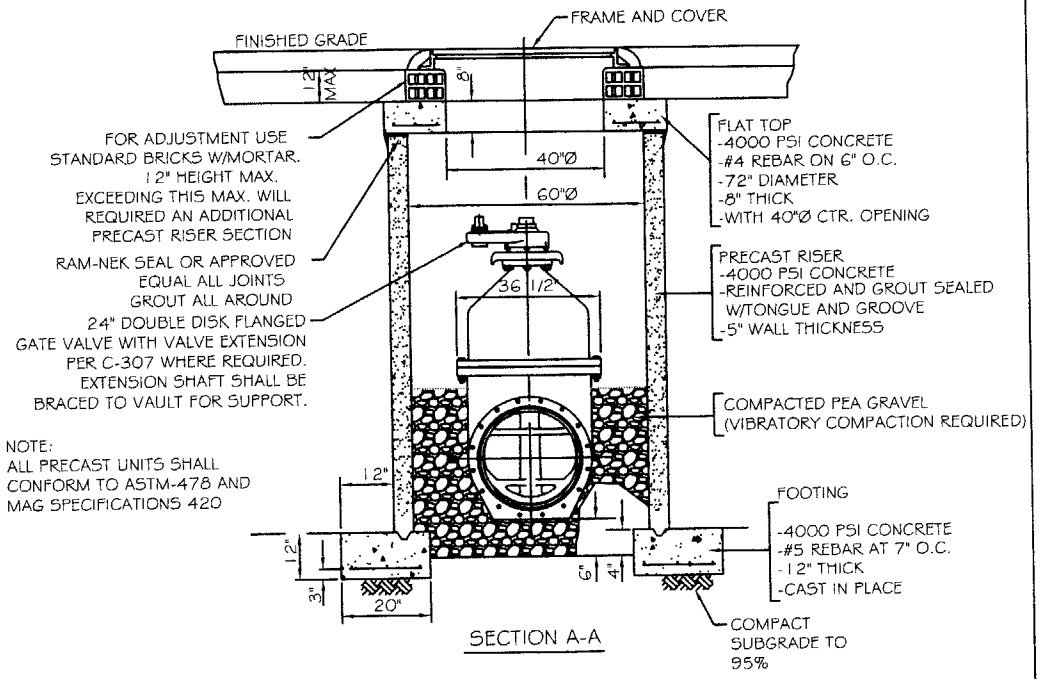

SECTION A-A

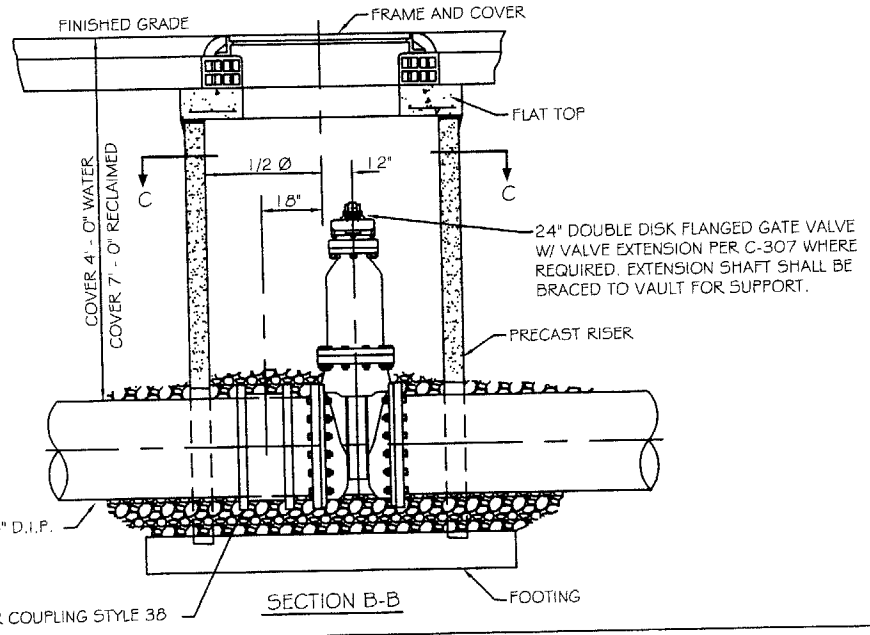

SECTION B-B

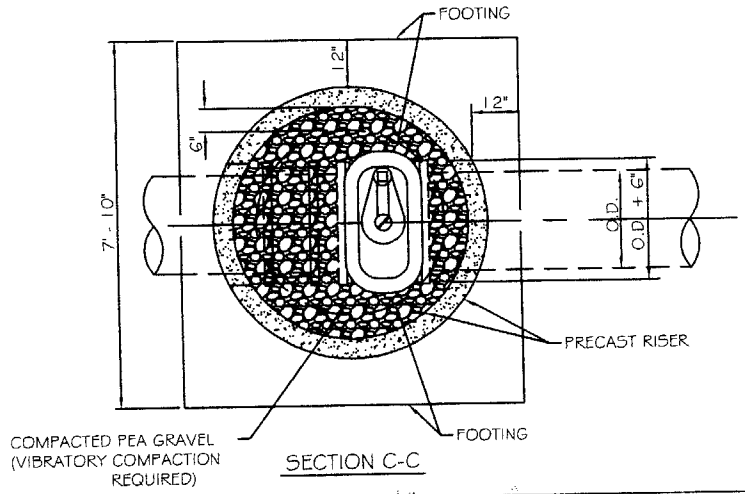

SECTION C-C

DETAIL NO.					DETAIL NO.
C-320 NTS	CITY OF CHANDLER STANDARD DETAIL	**VAULT FOR 24" GATE VALVE**	APPROVED: CITY ENGINEER DATE: 01/19/16		**C-320** NTS